zipSERIES

MGI™

zip NAVIGATOR

User Manual

VERSION 4.6

Thank you for purchasing the Game Changing MGI Zip Navigator. To get the most out of your Zip Navigator please follow these quick steps before use.

- Register your Zip Navigator online [section 1.0]
- Assembling the Zip Navigator [section 3.0]
- Charge the battery [section 4.0]

For Customer Support, please contact MGI directly for immediate and professional advice.

mgigolf.com

MGI AUSTRALIA
Service Email: customerservice@mgigolf.com
Live Chat: visit mgigolf.com
Toll Free within Australia: 1300 644 523 (excludes mobiles) Western Australia/ Internal phone +61 3 8872 6700
Local Service Centres: visit mgigolf.com to locate you local Service Centre.

MGI USA
Service Email: serviceusa@mgigolf.com
Live Chat: visit mgigolf.com
Telephone: 1800 617 2990

MGI GLOBAL
Sales Email: globalsales@mgigolf.com
Service Email: globalservice@mgigolf.com
Live Chat: visit mgigolf.com

NOTE: *This user manual was correct at time of printing. The online version is the most up-to-date and must be referred to as the correct version. To download the most current user manual please visit mgigolf.com. Images shown throughout this manual may not be of the particular model you have purchased.*

Contents

1.0	**Registration**	**04**
2.0	**What Is Included**	**04**
3.0	**Assembling the Zip Navigator**	**05**
3.1	Attaching the Rear Wheels	**05**
3.2	Rear Wheel Positions	**06**
3.3	Unfolding	**07**
3.4	Folding	**08**
3.5	Fourth Foldable Rear Wheel	**09**
3.6	GPS Holder and Top Handle Compartment	**09**
3.7	Inverting Rear Wheels	**09**
4.0	**Battery Charging & Connection**	**10**
4.1	Initial Charge	**10**
4.2	Connecting the Battery onto the Zip Navigator	**10**
4.3	Charging the Battery after Use	**11**
4.4	Battery Storage	**11**
4.5	Disposal of Lithium Batteries	**11**
5.0	**Fitting the Golf Bag**	**12**
6.0	**Operating the Digital Top Box**	**13**
6.1	Top Box Display	**13**
6.2	Start / Stop the Zip Navigator	**13**
6.3	Turn the Zip Navigator Off	**14**
6.4	Battery Level Indicator	**14**
6.5	Unit Measurements	**14**
6.6	Distance Modes	**14**
6.7	Competition Mode	**15**
7.0	**Remote Control**	**16**
7.1	Charging Your Remote Control	**16**
7.2	Forward Arrow	**16**
7.3	Down Arrow	**16**
7.4	Left and Right Arrow	**17**
7.5	Speed Control – Manually and Remotely	**17**
7.6	Keypad Unlock and Lock	**17**
7.7	Remote Range and Safety Stop	**17**
7.8	Pairing a Remote	**17**
8.0	**Gyroscope Straight Tracker Navigation System**	**18**
9.0	**Warranty**	**18**
9.1	Warranty Policy	**18**
9.2	Warranty Exclusions	**19**
9.3	Parts Installed During Warranty	**20**
10.0	**Preventative Maintenance Program**	**20**
10.1	Cleaning Your Zip Navigator	**20**
10.2	Rear Wheel Axles Maintenance	**20**
10.3	Upper and Lower Bag Strap	**21**
10.4	Correcting the Alignment	**21**
10.5	MGI Service Schedule	**21**
10.6	Service Record	**22**
11.0	**Service and Repair Centres**	**23**
12.0	**Purchasing Parts and Accessories**	**23**
13.0	**Contacting MGI**	**23**
14.0	**Contacting Local Agent**	**24**
15.0	**Frequently Asked Questions**	**24**

1.0 Registration

It important you register your MGI Zip Navigator online immediately as registration:

- Records your Zip Navigator for warranty purposes
- Speeds up any servicing required on your Zip Navigator
- Assists us to contact you with any updates to your Zip Navigator

To register your Zip Navigator, visit **mgigolf.com**

You will need to record your MGI serial number. This is found within the top handle compartment or on the rear of the buggy chassis.

Please keep this user manual on file for your own reference and a copy of your serial number;

My MGI Zip Navigator Serial Number is

[example AZXNV7223012345]

Purchased Date

/ /

You may be required to show proof of purchase so we recommend you keep your receipt with this manual.

2.0 What's Included

- MGI Zip Navigator
- 24v Lithium Battery
- Battery Charger
- GPS Holder
- Remote Control
- MGI Pouch with:
  - Quick Guide
  - Accessory Guide

3.0 Assembling Your Zip Navigator

3.1 Attaching the Rear Wheels

First, lubricate both axles using the black lubricant cloth provided in the MGI Pouch. Lubrication of the axles should be performed regularly to keep your cart in optimal condition. (Refer to 10.5 MGI Service Schedule)

Press the grey release button on the wheel hub. Place the wheel onto the axle. You will need to match up the inner female groove on the axle and the male of the wheel. When placed in position simply release the button. You hear a "click" when the wheel is properly secured.
To check that the wheel is properly in position pull on the wheel. If it is properly in position it will not slide off. Repeat for the other wheel.

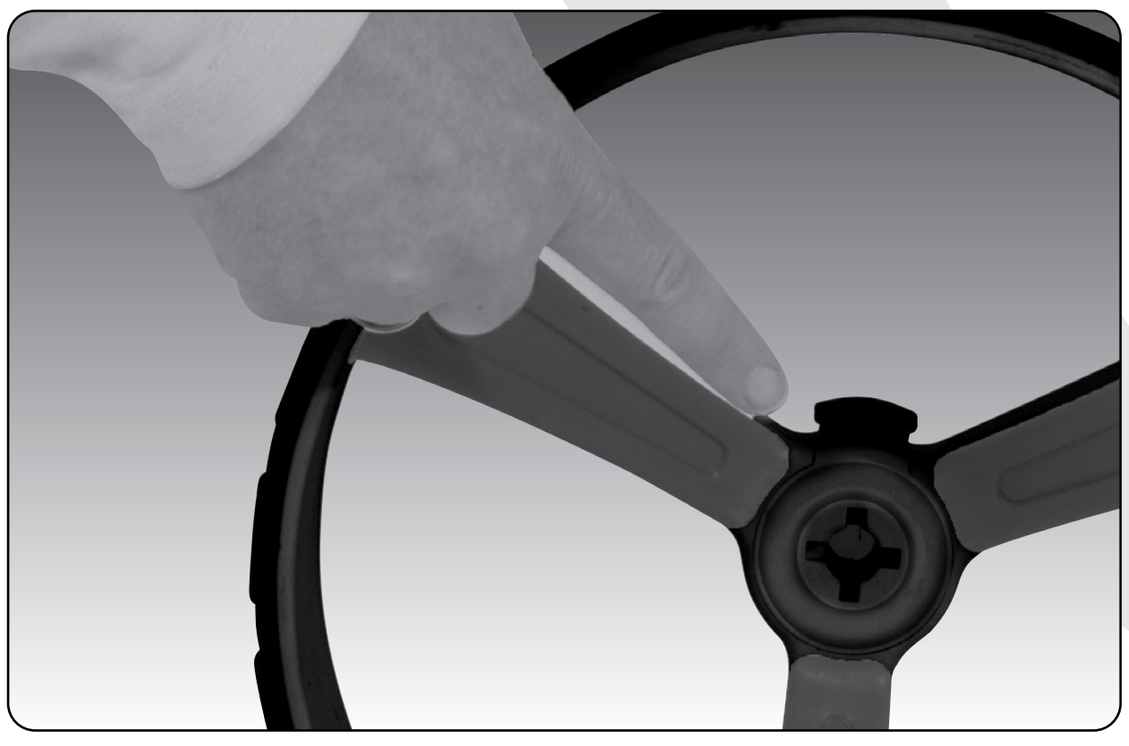

3.2 Rear Wheels Positions

The MGI Zip Navigator is designed to allow the rear wheels to be in two positions. The position is determined by where the wheel is locked on the axle in either of the two grooves [see picture]. The drive position is used during the normal operation of the Zip Navigator. The free wheel position is used to push the Zip Navigator freely, if required.

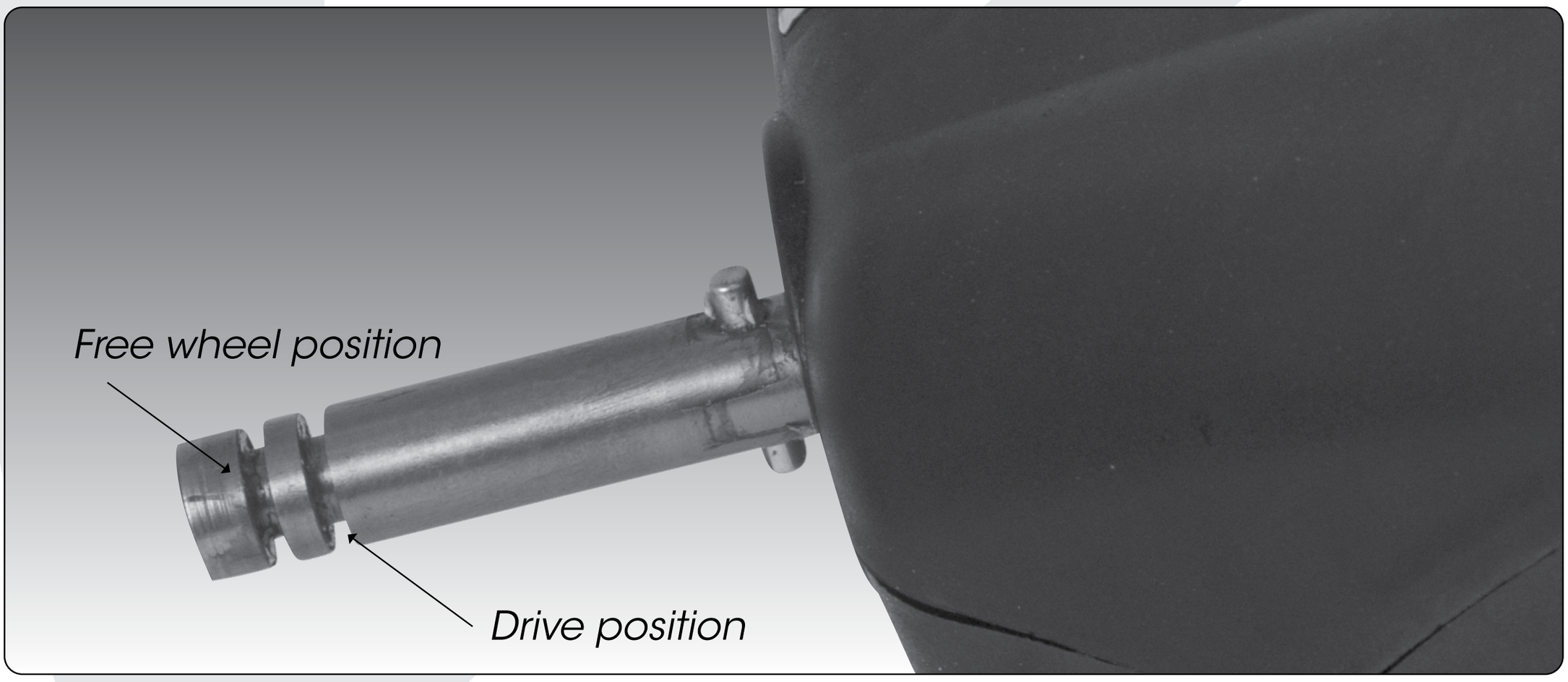

i. Drive position *– Lock the wheel onto the groove closest to the battery base. To do this, press the grey release button on the wheel hub, push the wheel on to the axle as far as possible. To test for drive position try rolling the wheel backwards. If you feel resistance then the wheel is now in drive position and ready to use. Repeat for other wheel.*

ii. Free wheel *– Lock the wheel into the groove closest to the end of the axle. To do this, press the grey release button on the wheel hub, push the wheel on to the axle and push the release button onto the groove. To test for free wheel position try rolling the wheel backwards. The wheel should spin freely with no resistance. Repeat for other wheel.*

3.3 Unfolding

Please see below the steps to unfold a Zip Navigator Handle.

Step 1: Ensure both rear wheels are attached.

Step 2: Release fold lever.

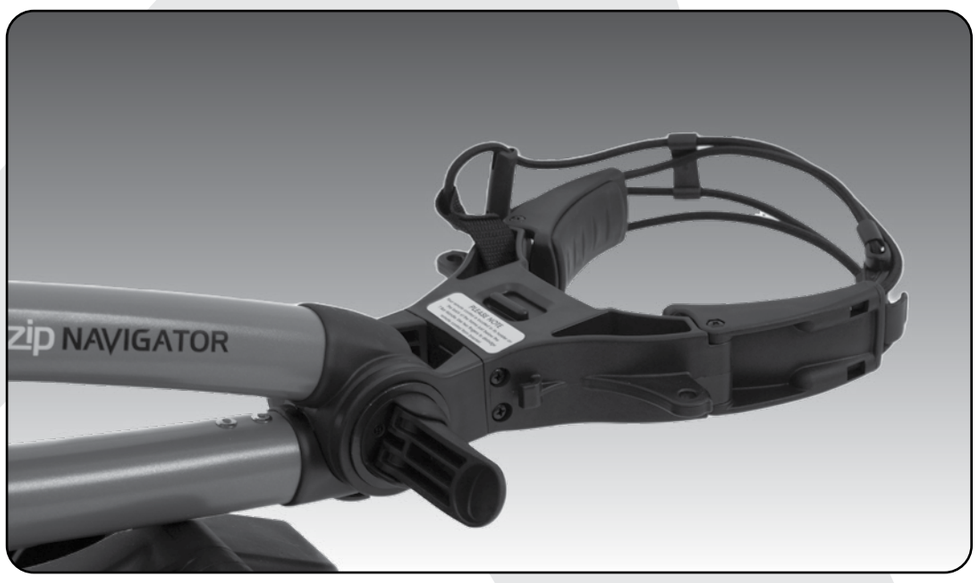

Step 3: Move the top bag support away from front wheel assembly until you hear it click.

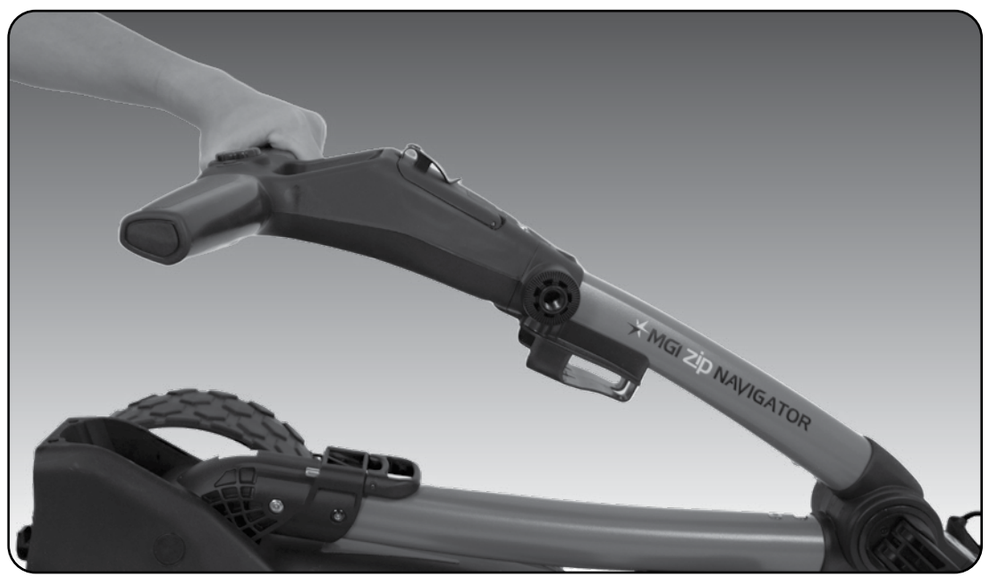

Step 4: The handle is now free to pull upwards. The handle will naturally unfold as you continue to pull until the handle is completely open.

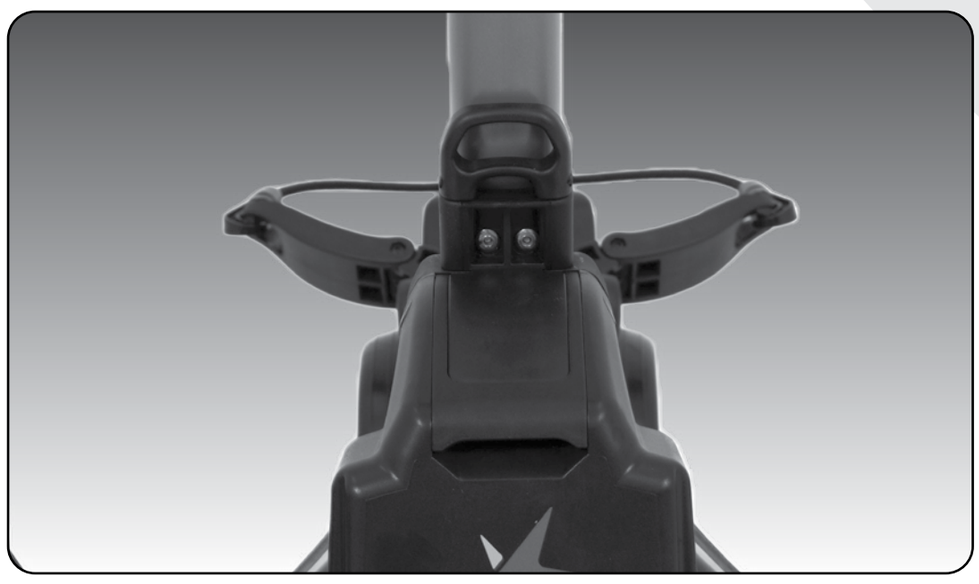

Step 5: Ensure that the latch at the bottom of the handle clicks into place.

Step 6: Close the fold lever to lock the handle into place in one of three positions.

Step 7: Push the top bag support down to move it into position.

3.4 Folding

Step 1: Disconnect the battery by lifting the battery handle. It can be left on or removed from the Zip Navigator.

Step 2: Open the fold lever to release the handle.

Step 3: Pull the latch up at the bottom of the handle.

Step 4: Lower the handle until flat.

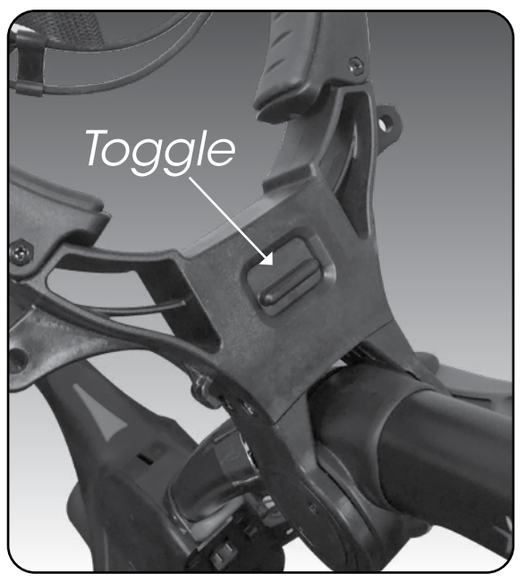

Step 5: Push the toggle down on the top bag support and then move the top bag support down so that it locks over the front wheel assembly.

Step 6: Close the fold lever to lock the handle into place.

3.5 Fourth Foldable Rear Wheel

The MGI Zip Navigator comes standard with a fourth foldable and extendable rear wheel. This wheel MUST be unfolded and extended into position at all times when the Zip Navigator is in use. This will provide the ultimate stability across all terrains. This fourth wheel should be cleaned regularly with a cloth to ensure it can be folded and retracted as required for storage.

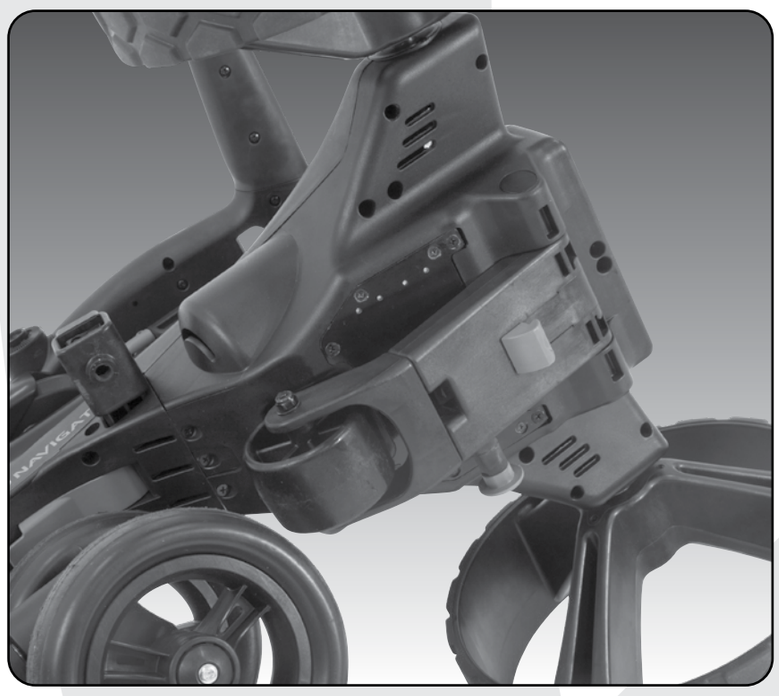

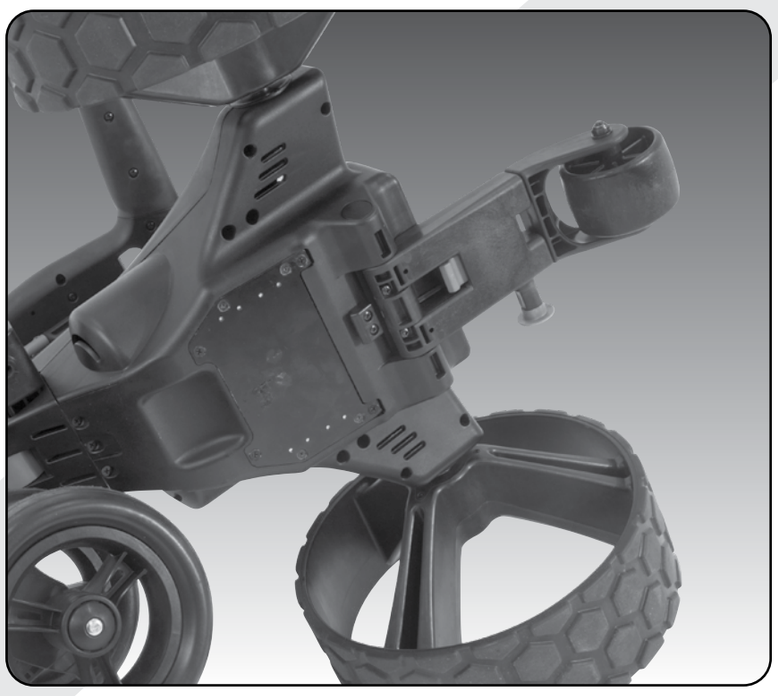

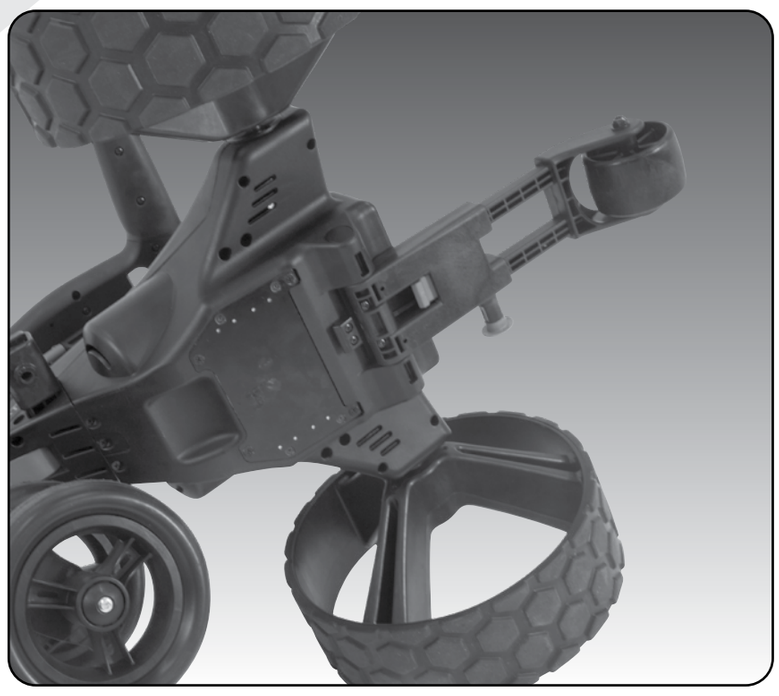

3.6 GPS Holder and Top Handle Compartment

In the top handle compartment there is a position for a GPS/mobile device holder. Open the compartment and connect the holder into position. To open, press the button at the top of the holder. Place the GPS into the cradle, then close the holder by squeezing the two sides closer together. To remove, gently push the GPS Holder up and away from the Navigator

3.7 Inverting Rear Wheels

The rear wheels can be inverted on the axle to reduce the size of the Zip Navigator when folded. To invert the rear wheels, press the grey release button on the wheels hub and remove from the axle. Invert the rear wheels so that the wheels hub protrudes away from the axles. Press the grey release button on the wheels hub and release once the wheel is fitted onto the axle.

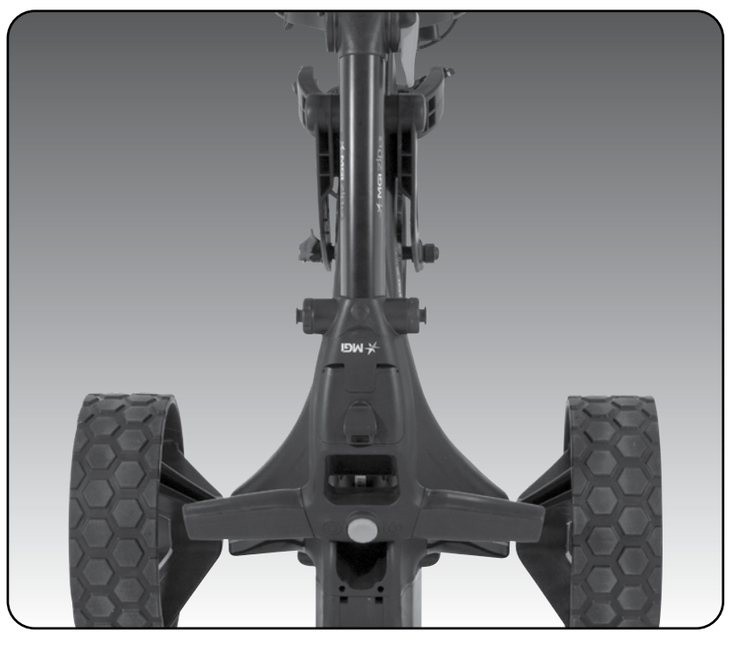

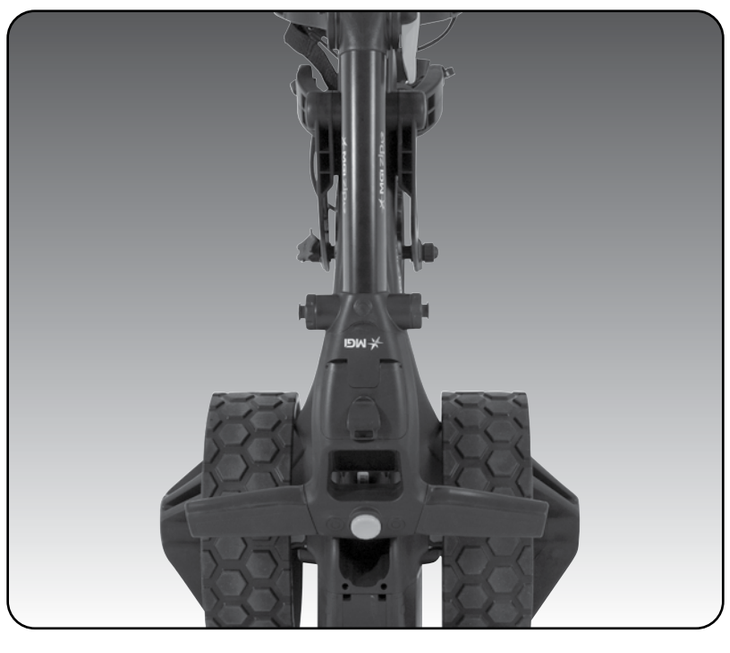

4.0 Battery Charging & Connection

The MGI Zip Navigator can only be used with the:
MGI 24v 36 hole Lithium battery

4.1 Initial Charge

- Before using your MGI Zip Navigator for the first time you must fully charge the battery overnight.
- Plug the charger AC lead into a power point - the green LED illuminates to indicate the charger is on.
- Plug the charger output connection into the connector on the front of the battery - the red LED illuminates to indicate it is charging.
- When the charging LED indicator has turned green, the battery is fully charged and ready for use.

Please refer to the battery charger user manual for further information.

4.2 Connecting the Battery onto the Zip Navigator

Position the battery on the Zip Navigator and push the battery down to secure it.

Push the handle down to connect the battery to the Zip Navigator.

Your Zip Navigator has been equipped with a fail safe battery connection, so the Zip Navigator will not move when you connect the battery. Your Zip Navigator will only start via the top handle button or the remote.

4.3 Charging the Battery after use

- Disconnect the battery by lifting the handle.
- The battery can be left on or removed from the Zip Navigator for charging.
- Plug the charger AC lead into a power outlet - the green LED illuminates to indicate the charger is on.
- Plug the charger output connection into the connector on the front of the battery - the red LED illuminates to indicate charging.
- When the charging LED indicator has turned green, the battery is fully charged and ready for use.

*The Zip Navigator AT battery MUST be charged after every use. Failure to do so maybe damage the battery.

4.4 Battery Storage

- Lithium batteries should not be stored for long periods of time, either depleted or fully charged. Ideally the battery should be at 40-50% capacity, stored in a clean, dry environment on a hard non flammable surface, between 15°C (60°F) to 25°C (80°F). As lithium batteries slowly discharge over time, it is recommended that the battery be power cycled every 6 months if left unused and stored as above.
- Do not leave your lithium battery in a car as high temperatures can damage the battery cells. Do NOT charge your MGI lithium battery for more than 10 hours.

4.5 Disposal of Lithium Batteries

This product contains materials that requires special handling at end-of-life. Please contact your local environmental authority or governing body for guidance on safe disposal and recycling in accordance with regional regulations. DO NOT dispose of in general waste.

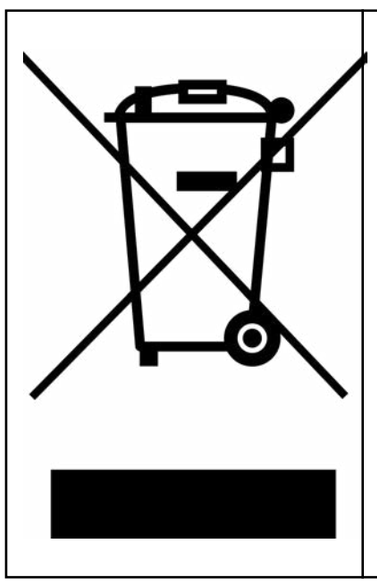

Correct Disposal of this product
This marking indicates that this product should not be disposed with other household wastes throughout the EU. To prevent possible harm to the environment or human health from uncontrolled waste disposal, recycle it responsibly to promote the sustainable reuse of material resources. To return your used device, please use the return and collection systems or contact the retailer where the product was purchased. They can take this product for environmental safe recycling.

5.0 Fitting a Golf Bag

Ensure that the top bag support straps are disconnected.
Position the golf bag on the Zip Navigator.
Secure the top bag support strap

- Select a good position for the elasticised straps to be put around the golf bag.
- Stretch the longer end of the strap and loop the rounded plastic bar underneath the hook on the shorter end.
- The top bag support straps should now be connected.

Please ensure the top bag support straps are hooked in place securely before releasing. Failure to do so could result in injury to the user.

Adjusting the length of the top bag support strap
The rounded plastic bar on the longer strap can be adjusted to ensure the bag is securely in place.

Secure the lower bag strap and pull the lower bag strap over the base of the golf bag.

6.0 Operating the Digital Top Box

6.1 Top Box Display

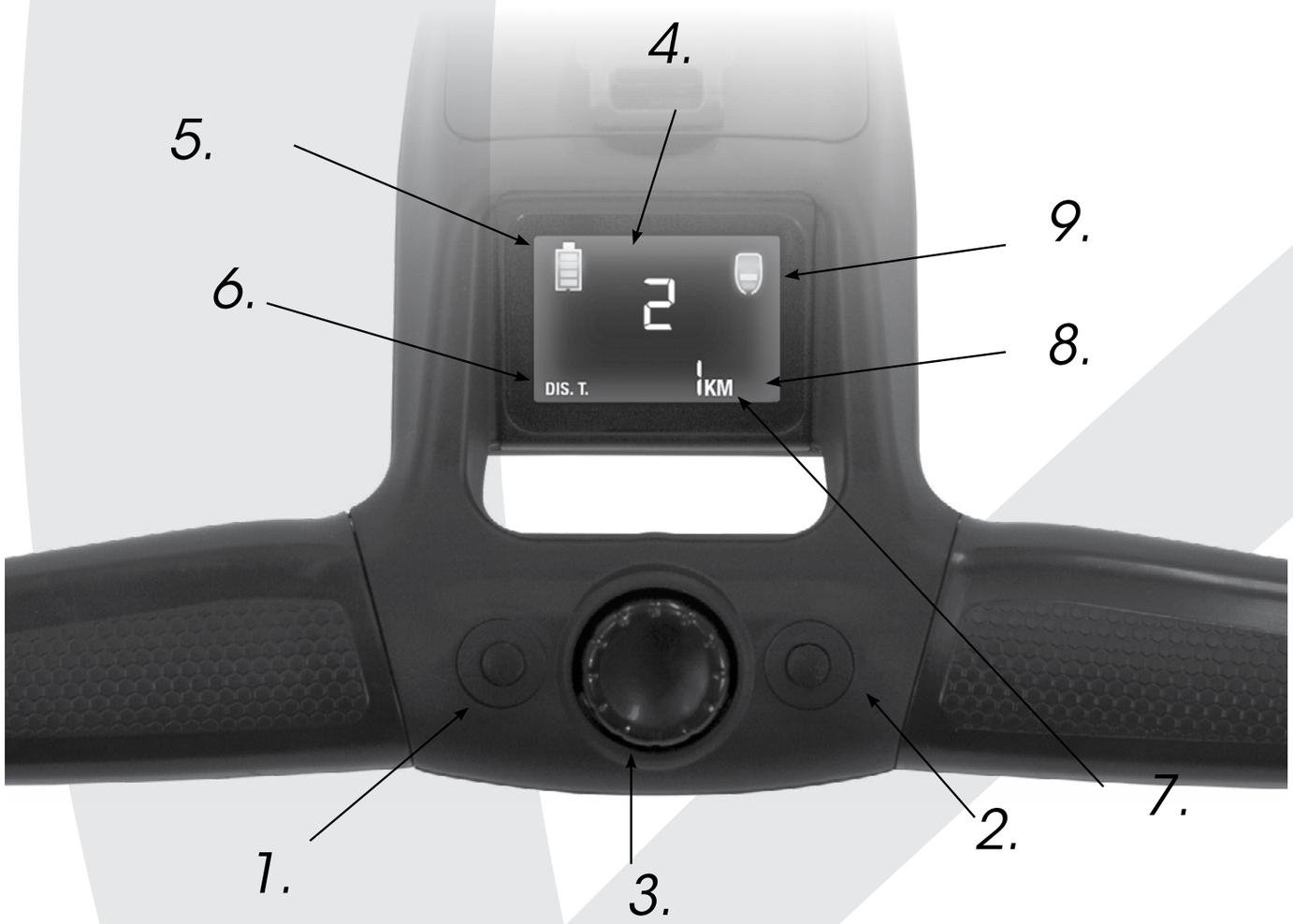

1. Distance Mode Button
2. Unit Setting Button
3. ON / OFF Speed Control Button
4. Speed Setting Indicator
5. Main Battery Level Indicator
6. Distance Mode
7. Distance
8. Unit Measurement
9. Remote Battery Level Indicator

6.2 Start / Stop the Zip Navigator

Zip Navigator Speed Control

Please note the following points regarding the Zip Navigator Speed Control.

1. To select the desired speed, rotate the speed control button. Turning the speed control button clockwise will increase the speed, whilst anti-clockwise will decrease speed.
2. The speed setting chosen is displayed in the centre of the screen.

Please note you will feel notches as you rotate the speed control. The notches do not indicate a change in speed. The speed will only increase or decrease as the number changes in the display.

3. To start the Zip Navigator at this desired speed, press the speed control button.
4. Another tap will stop the Zip Navigator.
5. The desired speed can be altered up or down while the Zip Navigator is moving.

6.3 Turn the Zip Navigator Off

Zip Navigator Battery
Please note the following points regarding the Zip Navigator battery.

Connecting the Battery onto the Zip Navigator
1. Position the battery on the Zip Navigator and push the battery down to secure it. Push the battery handle down to connect the battery to the Zip Navigator.
2. To turn the Zip Navigator Top Box Display off: Hold down the Start/Stop Speed Control Button and Left Hand Distance Mode Button for four seconds and the display will turn off thereby disabling the Top Box.

Please note that the battery will still be connected to the Zip Navigator and will continue to draw power whilst connected.

Please note that the Zip Navigator display will also turn off if the Speed Control is not operated for 30 minutes.

Once again, please note that the battery will still be connected to the Zip Navigator and will continue to drain whilst connected.

3. To reactivate the Top Box Display, whilst the battery is connected, hold down the Start/Stop Speed Control Button and Left Hand Distance Mode Button for four seconds and the display will turn on, thereby enabling the Top Box.
4. To fully shut down the Zip Navigator and prevent the battery from discharging, disconnect the battery by lifting its handle. The battery can be left on or removed from the Zip Navigator.

6.4 Main Battery Level Indicator
Battery indication is located on the left side of the top box screen. Four coloured bars are highlighted showing full charge. The number of bars displayed, indicates the battery life available. You should always check the battery status before you play golf to ensure the main battery is fully charged.

6.5 Unit Measurements
You can change from meters / kilometres / yards / miles simply by pressing the Unit Setting Button [on the right].

6.6 Distance Modes
There are three distance measurement modes. To move between the modes, press the Distance Mode Button [DM] on the left.

Distance A and B: resettable distance measurements can be used to measure how far you hit your shot and to measure how far you have walked for the day. To reset, simply press the DM Button [left side] for 3 seconds until the reading displays "0".

Distance Total: cannot be reset as it is the odometer for the life of the Zip Navigator. This feature will assist with service reminders which is recommended every 500km (310 miles) or 6 month period.

6.7 Competition Mode

In the unlikely event that the club you are playing at does not allow the use of distance devices you will need to disable the distances feature on the MGI Zip Navigator.

To disable the distance recording feature, simply hold down the left and right buttons at the same time for 3 seconds and "COMP MODE" will appear on the screen. In addition, the distance recording will be removed from the screen.

To exit COMP MODE hold down the left and right buttons at the same time.

7.0 Remote Control

PLEASE NOTE: Your remote control is located in a holder on the back of the handle just below the T Bar Handle. Use two fingers to remove the remote control from the holder.

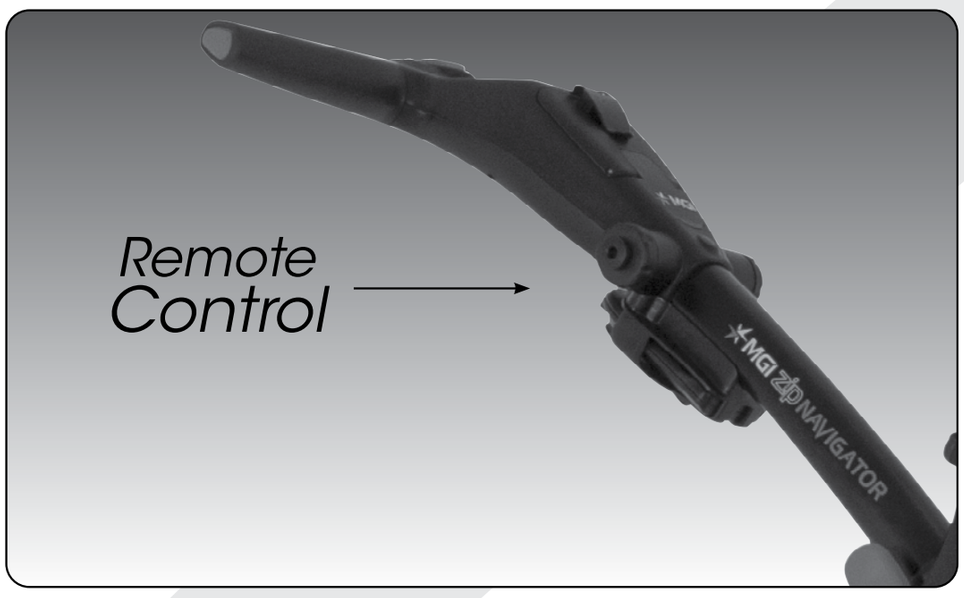

7.1 Charging Your Remote Control

Before you start using your Zip Navigator you must fully charge the remote control battery for approximately 6 hours or overnight using the USB cord provided. The top left UNLOCK button will flash while charging. When a full charge is complete, the green light will stay on and stop flashing.

To charge the remote, plug the other end of your cable into the Zip Navigator USB port located underneath the handle. Alternatively , the remote can be charged via PC, Laptop or AC adaptor (not included).

To check the level of power in the remote, press any button to signal the digital top box and the remote control battery level will show on the screen of the Zip Navigator.

We recommend recharging your remote battery when recharging your main battery after each round.

7.2 Forward Arrow

Press the forward button to start and accelerate the Zip Navigator. The longer you press the button, the faster the Zip Navigator travels. The Zip Navigator will always start at speed 2 when using the remote.

7.3 Down Arrow

The down arrow decreases the speed and initiates reverse.
If you are moving forward, the down arrow can be used to decrease speed, the longer the pressure, the slower the speed.
If you hold down the button the Zip Navigator will reverse. If you release the down arrow, whilst the Zip Navigator is in Reverse Mode, the Zip Navigator will stop [safety feature].

7.4 Left and Right Arrow

When the Zip Navigator is stopped, press the appropriate turn command and keep depressed until the degree of turn is achieved, then press the forward button for the Zip Navigator to go forward.

Whilst the Zip Navigator is moving, press the appropriate turn command, and keep depressed until the degree of turn is achieved. Momentary pressure will make a small adjustment to the direction, whilst prolonged pressure will increase the degree of turn and speed of the turn.

7.5 Speed Control – Manually and Remotely

Under manual control, you can adjust the speed by turning the speed control button clockwise [increase speed] or anti-clockwise [decrease speed]. When changing to the remote control, irrespective of the speed level indicated on the display, the Zip Navigator will always start at speed 2.

7.6 Keypad Unlock and Lock

The remote control has two buttons at the top which allow you to LOCK and UNLOCK the keypad. This will eliminate accidental button input when the remote is kept in your pocket. The STOP button will continue to work, when the LOCK feature is activated.

7.7 Remote Range and Safety Stop

The Zip Navigator can be remotely controlled up to a range 100m - 200m. The remote's range is affected by many factors, such as the environment, weather, geomagnetic and external electromagnetic interference. If the remote control loses contact with the Zip Navigator, then the automatic Safety Stop will initiate after five seconds. If the Zip Navigator is activated using the manual controls, the automatic Safety Stop feature will not be active. It is the user's responsibility to ensure that they have control of the Zip Navigator at all times. If the Navigator is inadvertently activated, it is the user's responsibility to ensure that it does not go into hazards irrespective of the Remote Range and Safety Feature.
Please note, the top left unlock button will flash every 3 seconds while the Safety Stop feature is active.

7.8 Pairing a Remote

In the unlikely event that your remote loses pairing with your Zip Navigator, or you have replaced your remote, it will need to be paired as follows:

1. Lift the main battery handle, disengaging the battery terminals.
2. Hold down the STOP Button on the remote until both the LOCK and UNLOCK buttons illuminate and remain solid– then release the STOP Button.
3. Re-engage the main battery by pushing the handle back down, ensuring the lights on the remote remain illuminated.
4. The remote will synchronise with the Top Box – the process will be complete once the LOCK and UNLOCK buttons are no longer illuminated

Please note, if you do not connect the Zip Navigator, as per point 3, with a battery, the remote will exit pairing after one minute.

8.0 Gyroscope Straight Tracker Navigation System

The Zip Navigator is built with a Patented Gyroscope Straight Tracker Navigation System. This technology ensures the Zip Navigator maintains its direction regardless of the terrain. The Zip Navigator will automatically brake or accelerate either wheel to maintain its direction.

When the Zip Navigator is controlled by the remote, the navigation system is always ON.

When the Zip Navigator is controlled manually, the navigation system is always OFF.

Tip: On a steep incline or if the Zip Navigator hits a divot or other object, the gradient may force the Zip Navigator off line. You do not need to adjust the Zip Navigator. The Zip Navigator will work its way back on course.

9.0 Warranty

9.1 Warranty Policy

The MGI Zip Navigator is covered by a limited 3 year manufacturer's warranty from the date of purchase. Duration of this warranty is:
– 3 years on parts*
– 3 years on Lithium batteries and chargers

*MGI or an authorised service centre will repair or replace any parts found to be defective in materials or workmanship under normal use provided that:
1. The MGI Zip Navigator has been properly used, maintained and regularly serviced [see section 10.5]
2. The replacement or repair is performed by an authorised MGI service centre or the owner with MGI approval.

Our goods come with guarantees that cannot be excluded under Consumer Law. You are entitled to a replacement or refund for a major failure and for compensation for any other reasonably foreseeable loss or damage. You are also entitled to have the goods repaired or replaced if goods fail to be of acceptable quality and the failure does not amount to a major failure. This warranty is in addition to other rights and remedies available to the consumer under law. If a warranty claim is to be made, please cease use of the goods immediately and contact your place-of-purchase or your nearest Authorised Service Centre. Alternatively, MGI can be contacted directly via details on the back of this User Manual. Proof-of-purchase is required.

9.2 Warranty Exclusions

The following events are not covered under warranty:
Normal wear and tear;

- (e.g. tyres, rubber handlebar, elastic straps, paintwork, battery performance, axles threads, charging ports on batteries and remotes, screen glass etc.)
- Minor appearance defects which bear no effect on the operation of the unit and are considered by the manufacturer to be within the accepted standards.

The following events will void warranty:

- Battery BMS failure caused by improper charging cycles, i.e. letting battery drain to zero charge.
- Any alteration performed by non-authorised people or companies.
- Fitting of parts or accessories not recommended by MGI.
- Any damage caused by continued operation of the product after it is known to be defective.
- Damage to the seat and/or seat support bracket on the unit.
- Damage caused by partial or full submersion in water - affecting the drive system or electronics.*
- Damage caused by the unit being driven into bunkers, other course hazards or clubhouse and carpark hazards.
- Damage caused by golf balls or golf clubs.
- Application of external force to any part of the unit or battery.
- Fusion/overheating of motor or electronics through overload (i.e. using the product to aid the user uphill) or continued operation whilst stationary.
- All implied warranties [save those preserved by statute] are excluded.
- Liability for consequential damages under any and all warranties are excluded to the extent exclusion is permitted by law.

* In the event of submersion in water (partial or full) of your Zip Navigator; MGI advises the complete write-off of your Zip Navigator.

The cost of replacing the water-damaged components (including labour) exceeds the price of a replacement Zip Navigator.

If you elect to purchase replacement components, i.e. motors, gearbox, motor controller and electronics, we advise the replacement of ALL components simultaneously. Replacing individual components on a water-damaged Zip Navigator poses a higher risk of future failure of other components and therefore these parts will not be covered under warranty.

Please note that MGI does not warrant water-damaged batteries and, due to fire risk, under no circumstances should they continue to be used.

MGI Golf only offers a warranty within the country where the buggy/caddy was purchased - across all MGI electric buggies/caddies, batteries, chargers, and accessories. In some instances, MGI may

uphold a warranty claim and supply the parts under warranty, however, the freight and labour to install/repair must be covered by the customer.

9.3 Parts Installed During Warranty

Warranty coverage for components installed during a motorised Zip Navigator's warranty period shall consist of the duration of the Zip Navigator's warranty period, provided the warranty installation is performed by MGI, an authorised service centre or the Zip Navigator owner on approval. Replacement of parts under warranty will not extend the warranty of the Zip Navigator or parts.

Warranties are non-transferable. The warranty applied to a product, on purchase, is limited to the original purchaser.

10.0 Preventative Maintenance Program

To properly provide for the continued operation of your MGI Zip Navigator, MGI has introduced its Preventative Maintenance Program [PMP]. The PMP consists of work to be carried out by both the owner and authorised service centres. To maintain the warranty of your MGI Zip Navigator, it is essential that this work is carried out. If the work carried out by the authorised Service Centre is to replace parts that are part of the maintenance schedule, the owner will be charged for the parts and labour. If the work to be carried out is covered under warranty, MGI will bear the cost.

10.1 Cleaning Your Zip Navigator [See Maintenance Schedule]

For years of good operation, your Zip Navigator requires care and attention:

- Keep your Zip Navigator clean by using a cloth with warm water and a mild detergent.
- Do not hose down your Zip Navigator under any circumstance, as the Zip Navigator has electronic components.
- Ensure that the seat stem bracket is free of sand and debris.
- Do not submerge your Zip Navigator, partially or fully as it will damage the drive system and/or the electronics. The Zip Navigator is designed to withstand wet weather (in conjunction with a Zip Rain Cover [sold separately]).
- Clean the Zip Navigator battery base when the battery is removed from the Zip Navigator.
- Regularly brush away sand/dirt from moving parts and toggles for smooth operation.

10.2 Rear Wheel Axles Maintenance [See Maintenance Schedule]

The rear wheel stub axles need to be lubricated regularly. Remove the rear wheels by depressing the spring clip and at the same time pull off the wheel. Apply Petroleum Jelly or light grease to the stub axles. Use a very small amount as the lubricant can attract sand. If you play in sandy conditions you should clean the axle and re-lubricate fortnightly. Once your cloth has dried out, please lightly coat the axle with Petroleum Jelly.

10.3 Upper and Lower Bag Strap Maintenance [See Maintenance Schedule]

The bag straps should be replaced as per the Service Schedule. The upper bag strap can be replaced by:

- Removing the left and right hand straps form the upper bag support.
- Undo and remove the screws holding the strap in position on the bag support.
- Remove and replace both bag straps.
- Insert bag strap securing screws.

10.4 Correcting the Alignment

Please see Zip Navigator Motor Trimming at **mgigolf.com**.

10.5 MGI Service Schedule

It is the owner's responsibility to ensure that all periodical checks, necessary adjustments and services are carried out. If in doubt please contact the MGI service centre:
Australia 1300 644 523
USA 1800 617 2990

Any work performed on your Zip Navigator should be recorded on your service record (see page 21) regardless of the work.

MGI Zip Navigator	Monthly	6 Monthly	Every 2 yrs	Every 3 yrs
Wipe down the Zip Navigator with a warm cloth after each use [do not hose]	BO			
Lubricate rear wheel stub axles	BO			
Check and tighten nuts and bolts		BO		
Check and tighten handle pivots		BO		
Check alignment of Zip Navigator – ensure that it runs straight		BO		
Replace Speed Controller and On/Off switch assembly				BO /SC
Replace rear and front wheels				BO
Replace upper and lower bag straps				BO

BO = Zip Navigator owner can carry out this work
SC = Charged work to be carried by approved service centre
BO/SC = The six monthly service can be completed by either an authorised service centre or the owner of the Zip Navigator.

10.6 Service Record

6 month inspection	Date: Invoice #:	Serviced by: Signature:
1 year inspection	Date: Invoice #:	Serviced by: Signature:
1 ½ year inspection	Date: Invoice #:	Serviced by: Signature:
2 year inspection	Date: Invoice #:	Serviced by: Signature:
2 ½ year inspection	Date: Invoice #:	Serviced by: Signature:
3 year inspection	Date: Invoice #:	Serviced by: Signature:
3 ½ year inspection	Date: Invoice #:	Serviced by: Signature:
4 year inspection	Date: Invoice #:	Serviced by: Signature:
4 ½ year inspection	Date: Invoice #:	Serviced by: Signature:
5 year inspection	Date: Invoice #:	Serviced by: Signature:
5 ½ year inspection	Date: Invoice #:	Serviced by: Signature:
6 year inspection	Date: Invoice #:	Serviced by: Signature:

11.0 Service and Repair Centres

For all servicing, please do not go back to your place of purchase.

To find your nearest service centre visit **mgigolf.com**

For warranty repairs to be authorised you MUST provide proof of purchase. Please keep this with you as well as your serial number you can record in this manual. It is most important you register your MGI Zip Navigator online for warranty purposes.

12.0 Purchasing Parts and Accessories

MGI offer a full range of spare parts for repairs not covered by warranty. Please see contact details below for further information.

13.0 Contacting MGI

mgigolf.com

MGI AUSTRALIA
Service Email: customerservice@mgigolf.com
Live Chat: visit **mgigolf.com**
Toll Free within Australia: 1300 644 523 (excludes mobiles) Western Australia/ Internal phone +61 3 8872 6700
Local Service Centres: visit **mgigolf.com** to locate your local service centre.

MGI USA
Service Email: serviceusa@mgigolf.com
Live Chat: visit **us.mgigolf.com**
Telephone: 1800 617 2990

MGI GLOBAL
Sales Email: globalsales@mgigolf.com
Service Email: globalservice@mgigolf.com
Live Chat: visit **mgigolf.com**

14.0 Contacting Local Agent

Please refer to **mgigolf.com** to find the distributor in your country.

15.0 FAQ

Q:My Zip Navigator is not tracking straight.
A: Please see Zip Navigator Motor Trimming on the **mgigolf.com** website

Q:I would like to have my MGI Zip Navigator serviced. Who do I call?
A: MGI AUSTRALIA
Visit mgigolf.com to find your nearest service centre using your postcode within Australian and New Zealand.
You can also call MGI Head office using any of the contact details. See Section 13.0 for details. Internationals please call your local agent as per Section 14.0

MGI USA
Call 1800 617 2990
Email: serviceusa@mgigolf.com

MGI GLOBAL
Email: globalservice@mgigolf.com

zipSERIES

MGI™

mgigolf.com

MGI AUSTRALIA
MGI HEAD OFFICE
11 Maurice Court Nunawading 3131
Victoria Australia
T +61 3 8872 6700 **E** sales@mgigolf.com
SERVICE customerservice@mgigolf.com
MGI USA
T 1800 617 2990 **E** salesusa@mgigolf.com
SERVICE serviceusa@mgigolf.com
MGI GLOBAL
E globalsales@mgigolf.com
E globalservice@mgigolf.com

Follow us on

Absolute attention has been taken to ensure this manual is correct at time of printing. Specifications, images and statistics may change at any time. Visitmgigolf.com for the most current model information. MGIG_2623 10/24 Version 4.6